1871005
Twin 2-Poster Bed
Parts List

A.	Spindle Posts	2 pcs
B.	Headboard Posts	2 pcs
C.	Headboard Panel	1 pc
D.	Footboard	1 pc
E.	Side Rails	2 pcs
F.	Support Slats	10 pcs
G.	Allen Head Bolts	8 pcs
H.	Phillips Head Screws	20 pcs
I.	Plastic Covers	8 pcs
J.	Flat Washers	8 pcs
K.	Lock Washers	8 pcs
L.	Allen Head Wrench	1 pc
M.	Phillips Head Screwdriver	1 pc

∗ Please make sure that you have all the parts indicated above before you begin assembly of this item.
∗ This item should be assembled on a soft surface to prevent scratching the finish during assembly.
∗ This item may require periodic tightening.

Hardware Illustrations

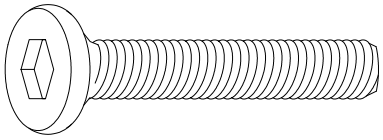

G. Allen Head Bolt

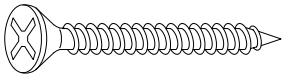

H. Phillips Head Screw

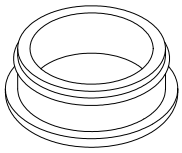

I. Plastic Cover

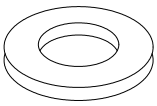

J. Flat Washer

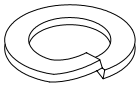

K. Lock Washer

1871005
Twin 2-Poster Bed

Attach Headboard and Footboard

Parts required

B.	Headboard Posts	2 pcs	I.	Plastic Covers	8 pcs
C.	Headboard Panel	1 pc	J.	Flat Washers	8 pcs
D.	Footboard	1 pc	K.	Lock Washers	8 pcs
E.	Side Rails	2 pcs	L.	Allen Head Wrench	1 pc
G.	Allen Head Bolts	8 pcs			

1. **Attach Headboard Panel (C)** Insert the ends of Headboard Panel (C) into the pre-bored slots of Headboard Posts (B). Align the pre-threaded holes in the panel with pre-drilled holes in the Headboard Posts (B). Secure with Allen Head Bolts (G), Lock Washers (K) and Flat Washers (J), using Allen Head Wrench (L). Make sure the finished side of the Headboard Panel (C) is facing the same direction as pre-cut slots for the Side Rails (E) on the bottom of the Headboard Posts (B). Cover the pre-drilled holes in the Headboard Posts (B) with Plastic Covers (I). See illustration #1.
2. **Attach Side Rail (E)** Insert the exposed hooks of Side Rails (E) into the pre-bored slots of the Headboard Posts (B) and Footboard (D). Press down Side Rails (E) onto the pins in the Headboard Posts (B) and Footboard (D). Make sure that the hooks are all the way down onto the pins. See illustration #1.

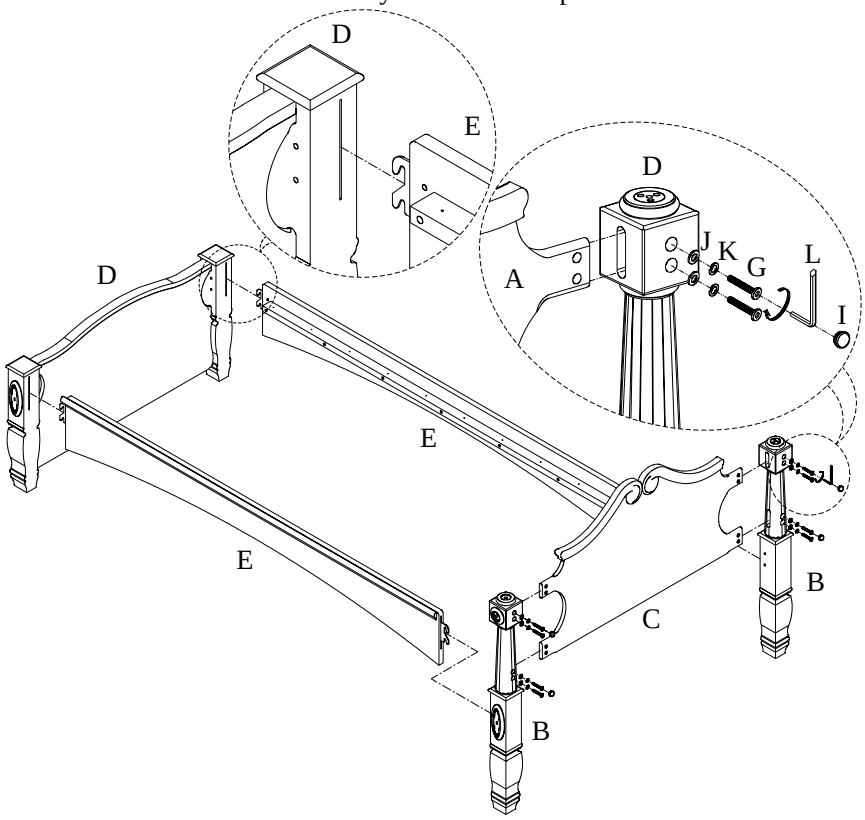

Illustration#1

1871005
Twin 2-Poster Bed

Attach Support Slats and Spindle Posts

Parts required

A.	Spindle Posts	2 pcs	F.	Support Slats	10 pcs
B.	Head Board Posts	2 pcs	H.	Phillips Head Screws	20 pcs
E.	Side Rails	2 pcs	M.	Phillips Head Screwdriver	1 pc

3.**Attach Support Slats (F)** Align the pre-drilled holes in the Support Slats (F) with the pre-drilled holes in the Side Rails (E). Secure with Phillips Head Screws (H) using Phillips Head Screwdriver (M). See illustration #2.

4. **Attach Spindle Posts (A)** Align the exposed threads in the Spindle Posts (A) with the pre-drilled holes in Headboard Posts (B). Tighten by turning in clockwise direction. See illustration #2.

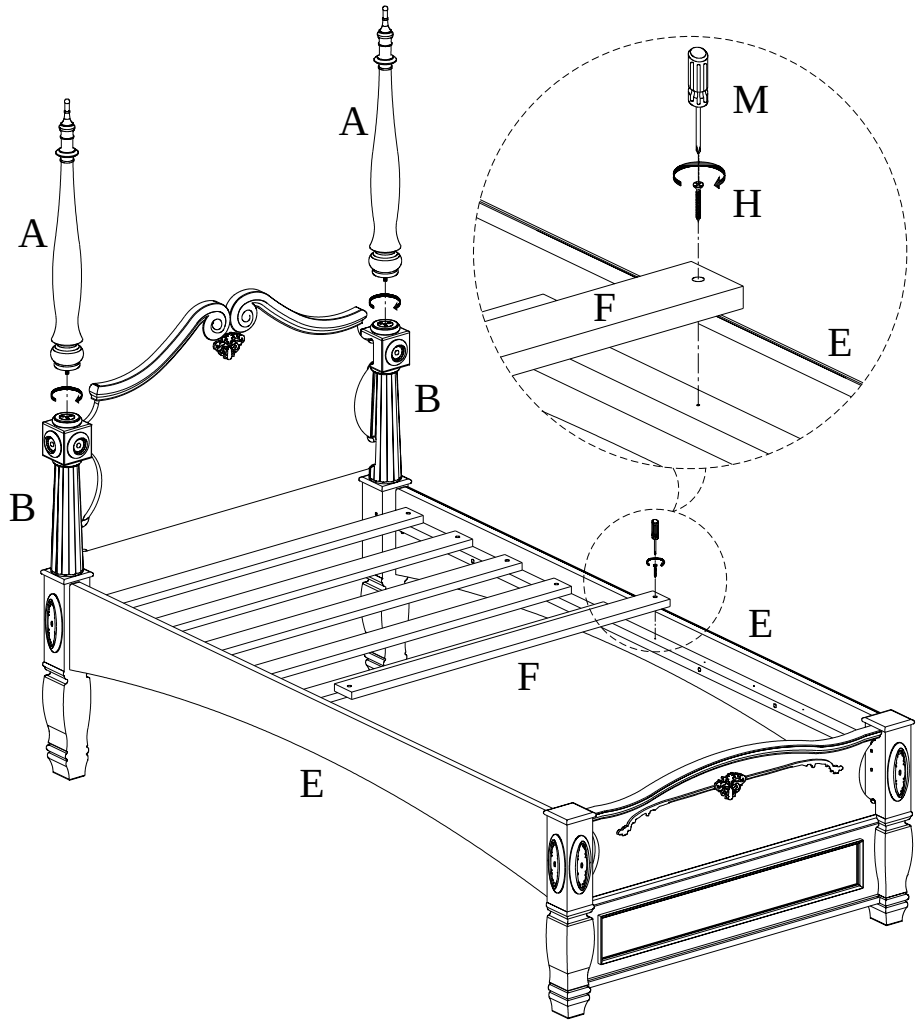

Illustration#2

R1-4-16-03